Product Line Catalog

From basic sensors to sophisticated subsystems, Cameron's solutions are in use across the globe in applications requiring the measurement, monitoring, analysis and control of gas and fluid processes.

For leading oil and gas and process control businesses, Cameron's Measurement Systems division is the measurement and control expert that helps you continuously raise performance through field-proven product brands, a broad product portfolio and worldwide sales and service channels.

NUFLO
BARTON
LINCO
JISKOOT
CALDON
CLIF MOCK
PROCESS ANALYTICS

NUFLO
BARTON
CLIF MOCK
JISKOOT
CALDON
LINCO
PROCESS ANALYTICS

Cameron's measurement brands set industry standards, drive innovation and raise performance

The NUFLO brand was created in 2003 and applied to premium lines of measurement products inherited in the merger of Halliburton Measurement Systems and Barton Instrument Systems. Today the brand represents a broad and innovative product portfolio including turbine meters, totalizers and flow computers.

The BARTON brand has been synonymous with rugged, accurate and field-proven quality since the 1940's with the introduction of the first dual-bellows meter assembly – the heart of BARTON differential pressure chart recorders, indicators and switches. The brand BARTON continues to maintain its reputation for tough, industry standard measurement instrumentation in the oil and gas, process control and nuclear industries.

The CALDON brand was created in 1987 as Caldon, Inc. by Cal Hastings in Pittsburgh, PA. Using transit time ultrasonic measurement technology, CALDON meters are an industry standard in the demanding nuclear industry and are quickly becoming recognized as the best-in-class ultrasonic choice in petroleum and hydroelectric applications.

The LINCO brand came to Cameron's through its 2009 acquisition of NATCO. The brand represents an expertise in delivering liquid custody transfer measurement solutions through the design and commissioning of systems and through the distribution of highly reputable instrumentation products and brands.

The JISKOOT brand was founded in 1961, by J.J. (Beer) Jiskoot in the UK, and became the leader in providing sampling and blending solutions to the worldwide oil and gas industry. Today, the JISKOOT team is behind Cameron's quality measurement capability and continues to provide "complete solutions" to any and all aspects of a customer's sampling and blending and process control requirements.

The CLIF MOCK brand was established in the 1960s with the introduction of the first isokinetic sampler probe into the oil and gas market and from that point forward built a reputation around delivering work-horse sampling products and capabilities to world-wide applications.

The PROCESS ANALYTICS brand came to Cameron as part of the NATCO acquisition in 2009 and represents a key capability within Cameron's quality measurement group. Initially recognized for its expertise in gas chromatography and packed columns, the brand now provides turn-around support services, environmental testing, analytical data purchase and specialized analytical products.

Index

Cameron

Cameron (NYSE:CAM) is a leading provider of flow equipment products, systems and services to worldwide oil, gas and process industries. The Company has annual bookings in excess of $5 billion, 11 operating divisions, more than 60 respected brands and 18,000 employees. Within the Cameron family, Measurement Systems is part of the Valves and Measurement group, a highly respected supplier of products and systems that measure, control and direct the flow of oil and gas from the wellhead to the refinery.

Measurement Systems Division

Cameron's Measurement Systems division designs, manufactures and distributes measurement, quality, and control instrumentation for the global oil & gas and process control industries. The Division was first established in 2003 as NuFlo Measurement Systems, which was itself the result of a merger of three well-respected measurement companies: Barton Instrument Systems, Halliburton Measurement Systems and PMC Global Industries. Since being acquired by Cameron in 2005, the Measurement Systems division has successfully executed an acquisition strategy that has dramatically broadened its product and capability portfolios and supported its growth.

Two such strategic acquisitions include Caldon, Inc. and Jiskoot Limited. Caldon is a premier supplier of ultrasonic metering solutions and Jiskoot is the world leader in sampling and blending systems for oil and gas applications. These two business units are the core of the Division's push to establish itself in fiscal and custody transfer applications such as LNG Storage, Ship Loading & Unloading and FSPO's. Other acquisitions include PRIME Measurement Products, North Star Flow Products, Linco-Electromatic, PAAI Process Analytical Applications, Inc. and the technology of Polartek 2000 Ltd.

The result of these synergistic mergers is a premier measurement solutions entity with decades of experience, a loyal and consistent customer base and a combination of competitive strengths that include field-proven product brands, worldwide sales and distribution channels and globally situated teams of instrumentation professionals.

Cameron's Measurement Systems division is a world leader in five key product and/or capability sectors including DPU products, turbine meters, sampling and blending. The Division is also raising the bar for ultrasonic flow metering and electronic flow measurement. The strategy going forward is to continue to strengthen our manufactured product lines and technical capabilities through internal development and strategic acquisitions.

Houston, TX
Divisional Headquarters

Calgary, AB
Canadian Head Office

Bognor Regis, UK
European Head Office

Duncan, OK
Technology Center

City of Industry, CA
Industrial Products Tech Center

Pittsburgh, PA
Caldon® Ultrasonics Tech Center

Tunbridge Wells, UK
Jiskoot™ Quality Systems Tech Center

NUFLO™ & BARTON®

Turbine Meters – Gas and Liquid

For the past 50 years, NuFlo and Barton turbine meters have grown and developed alongside the requirements of the international oil & gas and process control industries. Each brand has an unsurpassed reputation for withstanding severe environmental punishment while maintaining operational and measurement integrity.

NuFlo Liquid Turbine Meters

- Accurate and repeatable measurement
- Long service life even in severe applications
- Easy installation
- Broad range of end connections including: threaded, grooved, flanged, EZ-IN™, and WECO® 1500

NuFlo Gas Turbine Meters

- Single meter handles wide range of flow rates
- Carbide bearing design eliminates need for lubrication and withstands difficult service conditions
- Low inertia rotor design provides quick response to flow rate changes
- Two-bladed rotor offers large unobstructed flow area
- Electrical output signal adapts readily to a variety of readout devices

Barton High Accuracy Gas and Liquid Turbines

For more than 30 years Barton turbine meters have provided custody transfer accuracy into a broad base of gas measurement applications including aerospace, cryogenic metering, pipeline applications and gas service. These meters are manufactured to order with options that include materials of construction, bearing systems and end connections.

NUFLO™

Totalizers

With more than a quarter of a million units in operation, in applications around the world, Cameron is the undeniable leader in the design and manufacture of totalizers and flow analyzers. The NuFlo MC™ Family of Flow Electronics delivers a broad range of functionality and capability from the straightforward MC-I Totalizer, which provides rate and flow, to the MC-III EXP Flow Analyzer, which utilizes Modbus® communications to download extensive archival logs in less than a minute.

MC Flow Analyzers are ideal for use with NuFlo's comprehensive line of turbine meters or any other turbine brands on the market today.

Successfully operating in: test separators; flow lines; wellheads; truck loading and unloading stations

BARTON®

PD Meters

True "industry standards", Floco® and Flotrac® meters are staples in harsh environments that demand consistent, repeatable and rugged performance. Originally designed for raw crude oil production, the Floco F Series meter has proven itself to be a versatile unit that performs easily in a broad range of high viscosity fluids. Ideal for oils and grease, paints and coatings and even paraffin, the Floco meter can also be used to drive a proportional sampler to provide volume as well as product quality data. The Flotrac meter is a highly durable unit that provides accurate, high-pressure measurement of low viscosity liquids.

NUFLO™

Differential Pressure Cone Meter

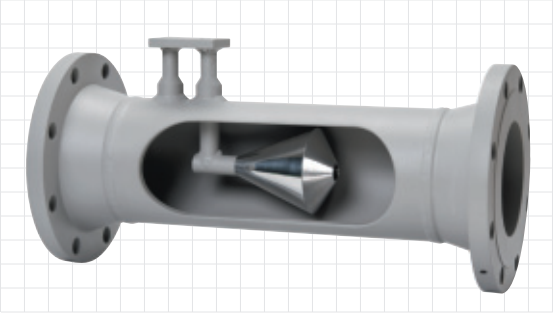

The differential pressure-based NuFlo Cone Meter is a process control and multi-fluid meter that provides accurate, repeatable and cost optimized measurement solutions. Designed to work in both unprocessed and processed applications, the NuFlo Cone Meter is ideal for upstream, midstream and downstream applications that present a wide range of measurement challenges. Key advantages include optimal operations in small spaces, extreme temperatures and diverse conditions; the device also offers an economic, compact design, low cost of ownership and since there are no moving parts a long, virtually maintenance free lifespan. For more information on the NuFlo DP Cone/Scanner 2000 Flow Computer Package see page 9.

CALDON®

Ultrasonic Meters

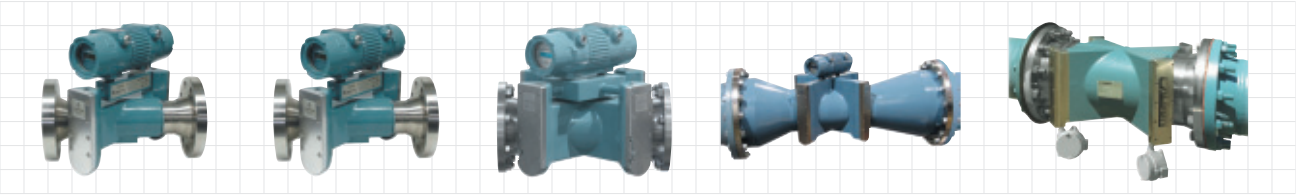

LEFM 220Ci *LEFM 240Ci* *LEFM 280Ci* *LEFM 280CiRN* *LEFM 280CiLT-R*

The Caldon line of ultrasonic meters uses advanced transit time ultrasonic technology to provide measurements based on the movement of sound waves through fluids. With Caldon ultrasonic meters in its product portfolio, Cameron has inherited a specialty in providing solutions for demanding high performance applications from clean liquids to mining slurries in both the nuclear and oil and gas industries.

Caldon Ultrasonic meters are already highly regarded in the demanding nuclear, defense and hydroelectric industries. For more information on Caldon Ultrasonics, including a complete capabilities overview, specific application expertise and the Caldon Hydrocarbon Calibration Laboratory see page 10.

BARTON®

Differential Pressure Unit (DPU) Sensors

With more than one million Barton DPU-based instruments in service around the world today, Cameron's Measurement Systems division is a premier supplier of reliable and accurate chart recorders, indicators, switches and pneumatic controllers. Originally developed in the early 1920s, our differential pressure technology features a welded bellows assembly that increases accuracy while dramatically reducing the effects of wear. To facilitate quick and easy repairs all DPU based instruments are supported with pre-calibrated exchange or repaired sub-module bellows assemblies.

- Chart Recorders and Controllers
- Differential Pressure Indicators
- Differential Pressure Indicating Switches

BARTON® & NUFLO™

Flow Computers & Automation Products

The Scanner® family of flow computers represents more than 70 years of measurement expertise and not surprisingly are considered pioneer brands in the development of electronic flow measurement technology and its adaptation to oil and gas applications.

With an installed base of more than 40,000 units worldwide, the Scanner line plays an integral role in the current move towards automation.

Cameron is committed to strengthening the Scanner product line by supporting its worldwide installed base of 1100 series flow computers and aggressively supporting the introduction of the ground-breaking 2000 series – an easy to use, ultra low power microEFM that delivers flow computer functionality at chart recorder pricing.

Cameron is also committed to investing millions of dollars researching and developing additional functionality to ensure the entire Scanner family continues to meet both existing and changing needs of operators, integrators and end users.

NUFLO™

Orifice Fittings and Meter Runs

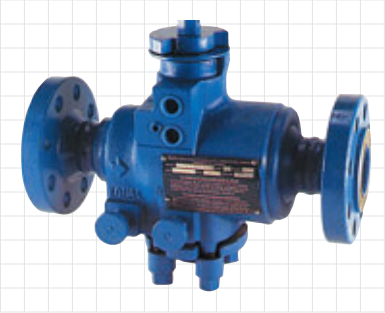

With the acquisition of North Star Flow Products, the Measurement Systems division secured its position as one of the largest manufacturers and distributors of orifice fittings, orifice plates, meter runs and accessories. The product line offers both single and dual run fittings and meter runs as well as a broad spectrum of accessories including plates, seals and straightening vanes.

NUFLO™ & BARTON®

Transmitters

NuFlo MVX®-II Multi-Variable Transmitters

The NuFlo MVX-II Multi-Variable Transmitter is a gas measurement unit built around a patented, silicon-based DPE cell. It combines the accurate and stable measurement of differential pressure, static pressure and temperature with high speed input sampling/averaging and communications capabilities. This low-powered, field-hardened gas measurement transmitter features an easy-to-use laptop interface and industry standard communication protocol which makes configuration, measurement, and reporting simple, accurate, and reliable.

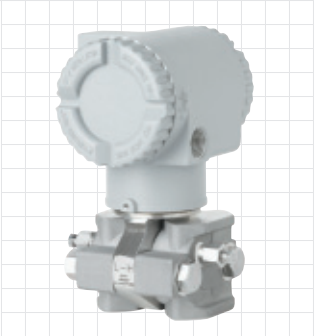

Barton FCX™ AII and CII Series Electronic Transmitters

Two decades of experience in developing capacitance based measuring devices has culminated in the FCX AII and CII series of transmitters. Models span the entire range of temperature, gauge, absolute and/or differential pressure and include flanged level transmitters.

NUFLO™

Relief Valves

In the mid-1940's, a new pilot-operated rather than spring-operated relief valve set a new standard for pressure control. The valve, manufactured over the years by companies like Garrett, USI and Axelson, is now manufactured and sold by Cameron's Measurement Systems division. The NuFlo pilot-operated pressure relief valve represents a tradition of advanced design and high-quality manufacturing abilities. These valves offer advantages not found in other relief valves - spring or pilot operated.

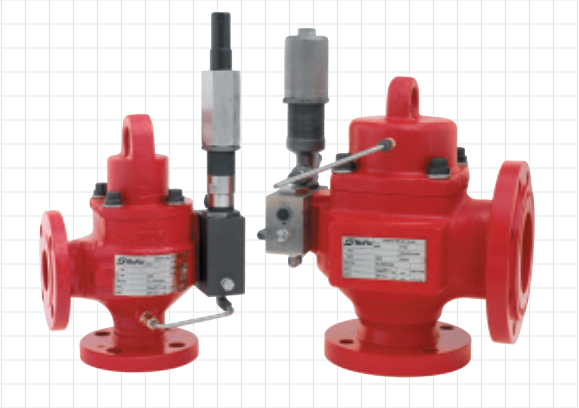

CLIF MOCK®

TrueCut® Sampler Products & Systems

Clif Mock and TrueCut are recognized pioneer brands in the international sampling industry. From as far back as the 1960's, when Clif Mock introduced the first isokinetic sampler, to today, this sturdy, accurate and versatile family of products has proven to be a top performer in a wide range of applications. Cameron continues to differentiate the product line by marrying it to the division's full line of measurement and control instrumentation including its DPU products, flow computers, transmitters, turbine meters and totalizers. In doing so we can provide customized sampling systems that enable a customer's integrated network to operate at peak performance.

For more information on Cameron's worldwide leadership in Sampling and Blending see Page 3.

JISKOOT™

Sampling and Blending Products & Systems

In March 2008 the Measurement Systems division of Cameron acquired Jiskoot Limited, a world leader in the design, manufacture and commissioning of sampling and blending systems for the global oil and gas industry.

For more information on Jiskoot Quality Systems see Page 11.

For more detailed information on Cameron's worldwide leadership in Sampling and Blending see Page 3.

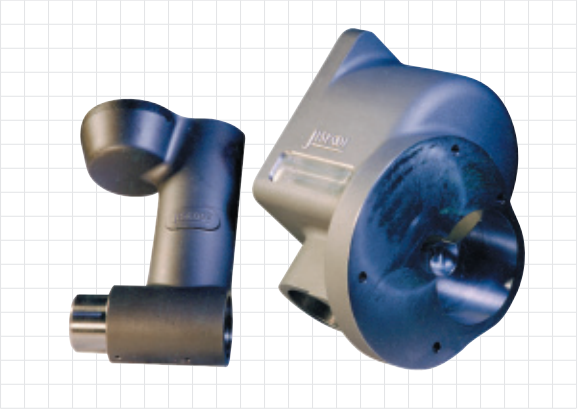

PRODUCT FEATURE

Scanner 2000 series Flow Computer

The Scanner 2000 microEFM packs the gas, steam, and liquid measurement capabilities, traditionally found in large flow computers, into a compact, low-power instrument that operates economically as a stand-alone chart recorder replacement, flow computer, and totalizer or as an integration-ready device for an existing SCADA system.

Simplicity and ease of use are integral to the design of the Scanner 2000 series. Basic parameters can be configured from a keypad inside the enclosure and all other parameters are easily configured using a PC or laptop and the ModWorX™ Pro software – which is provided free with every Scanner 2000.

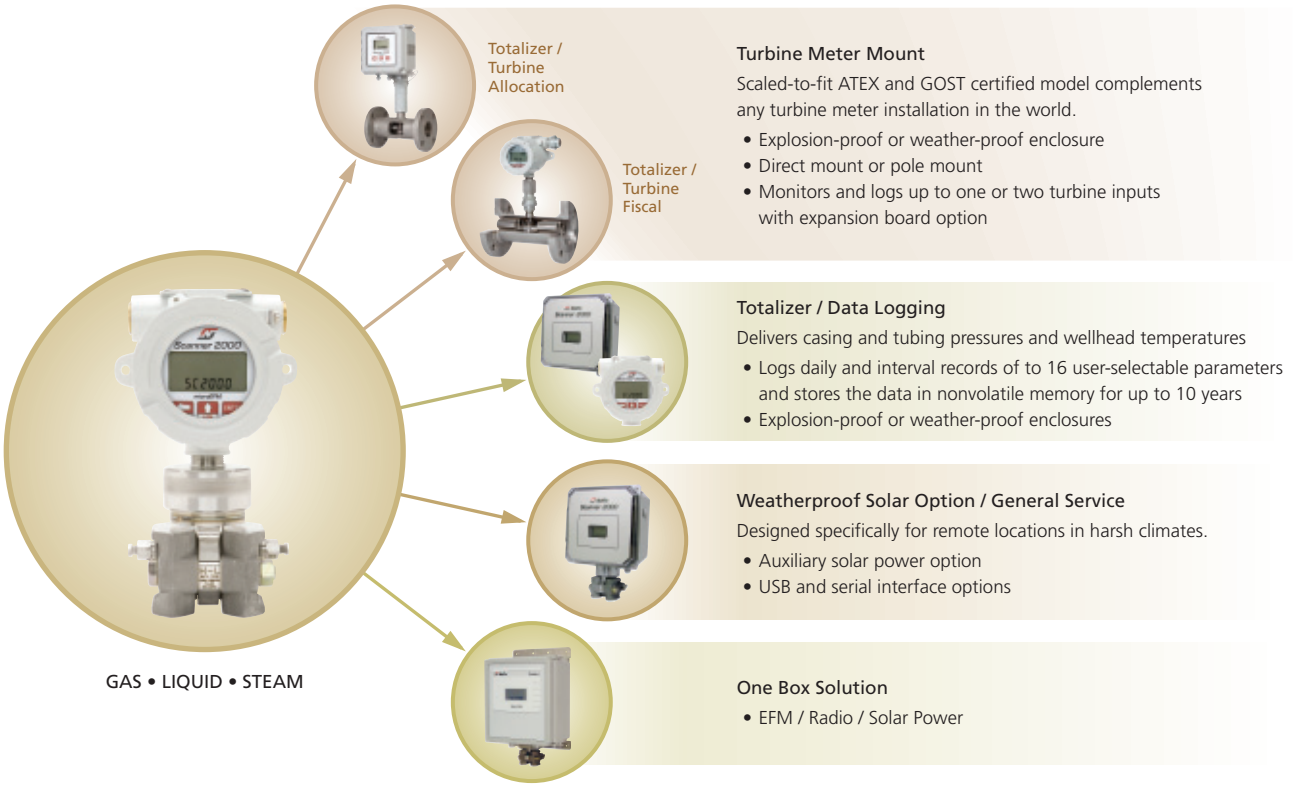

Turbine Meter Mount

Scaled-to-fit ATEX and GOST certified model complements any turbine meter installation in the world.

- Explosion-proof or weather-proof enclosure
- Direct mount or pole mount
- Monitors and logs up to one or two turbine inputs with expansion board option

Totalizer / Data Logging

Delivers casing and tubing pressures and wellhead temperatures

- Logs daily and interval records of to 16 user-selectable parameters and stores the data in nonvolatile memory for up to 10 years
- Explosion-proof or weather-proof enclosures

Weatherproof Solar Option / General Service

Designed specifically for remote locations in harsh climates.

- Auxiliary solar power option
- USB and serial interface options

One Box Solution

- EFM / Radio / Solar Power

Systems, SCADA and the Scanner 2000

With measurement and flow computing there's an application – there's data – there's transmission – and then there's you. Cameron has developed a quick and simple way for you to get your data – whether its right outside the door of your truck or in a remote field; whether you're accessing a stand alone unit or managing with a large and complex automation project.

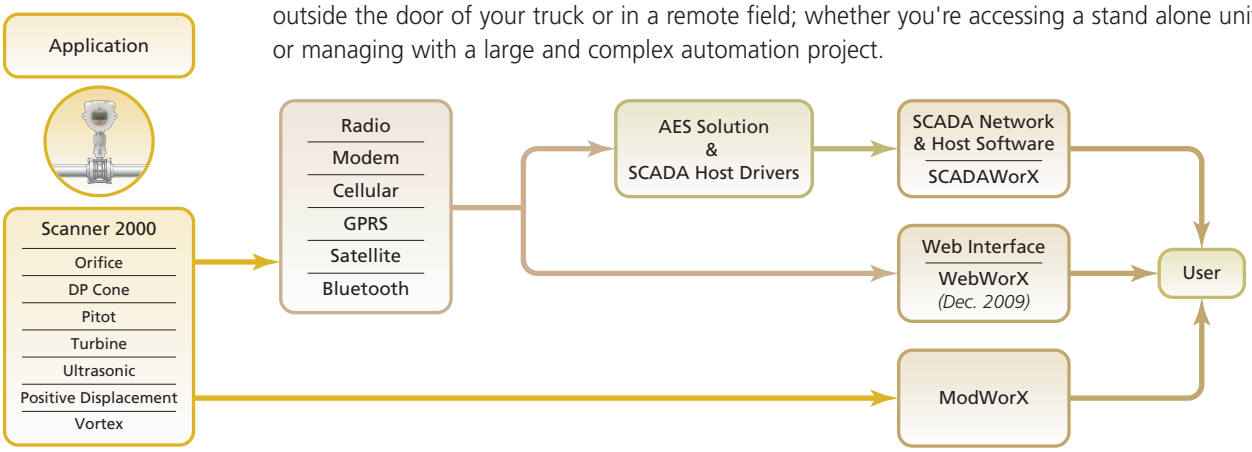

CALDON®

Caldon Ultrasonics

The Caldon Ultrasonics business unit specializes in measurement products, systems, and solutions founded on advanced transit time ultrasonic technology. When the Measurement Systems division of Cameron acquired Caldon, Inc. in 2006, the company was already a well-respected supplier to the nuclear, hydro and defense industries. Since then, Cameron has worked to increase the market opportunities for the LEFM family of allocation, fiscal and custody transfer solutions to the global petroleum industry. Today, Caldon petroleum solutions can be found in measurement and leak detection applications worldwide including:

- LNG and Cryogenic
- Crude Oil Pipeline
- Refined Oil Pipeline
- Multi-Product Pipeline
- FPSOs and Platforms

Key to the success of the Caldon and its emerging dominance is the Caldon Hydrocarbon Calibration Laboratory. Located in Pittsburgh PA, the Lab is the centerpiece of the Caldon Ultrasonics Technology Center, a $2 million facility designed and constructed specifically to support Cameron's commitment to growing its ultrasonic capability. The lab differentiates Cameron and the Caldon brand in four distinctive ways:

Performance: Replicating Field Conditions

- Calibration to a Reynolds number range that directly corresponds to actual field conditions ensures that meter performance will be unaffected by changes in flow rate and liquid viscosity
- Calibration using oil – not water – again replicates more accurately field conditions
- "System" Calibration can include downstream piping, upstream piping, flow conditioner & meter

Accuracy: Measurement Uncertainty

- NMI certified facility - guarantees uncertainty of 0.049%
- Accredited to ISO 17025 and Certified to ANSI/ISO/ASQ Q9001

Reduced Costs: Time and Money

- Dramatic reduction in waiting times as calibration can be inherent in production of the meter
- Eliminate the cost and the time to ship meters and systems from plant to lab to field

On-going Development of Leading Edge Technology

- Access to the full capability of the Caldon Lab provides Cameron engineers with an unsurpassed tool for conducting fundamental and on-going technology and product research

Sound Solutions: Transit Time Ultrasonic Flow Measurement

Transit time (or time-of-flight) flow measurement refers to the transmission of acoustic energy pulses through flowing liquids to establish volumetric flow rate. Sound pulses generated and received between a set of transducers will take a fixed time to cross a pipe filled with stationary liquid. Once the liquid is flowing in the pipe, a sound pulse sent in the direction of the flow will cross the pipe faster than a sound pulse sent against the direction of flow. This difference in transit times of the two sound pulses can be measured and is proportional to the velocity of liquid in the pipe.

Caldon in Nuclear: A successful translation of expertise and experience

For a nuclear power plant to operate at peak efficiency "feedwater flow" must be precisely measured. Caldon, Inc. pioneered the use of ultrasonic technology for this application and today is the only meter in the world approved by the NRC for feedwater flow at a nuclear plants.

JISKOOT™

Jiskoot Quality Systems

With the March 2008 acquisition of Jiskoot Limited of Tunbridge Wells, the Measurement Systems division of Cameron established itself as the primary international provider of highly accurate, value added sampling and blending solutions for the oil and gas industry.

Cameron's new business unit, Jiskoot Quality Systems, specializes in products and systems designed to improve profitability, provide a rapid return on investment and guarantee low lifecycle costs. Together with a network of more than 50 highly-trained agents in key locations around the world, Jiskoot Quality Systems has a reputation of delivering a project management capability that spans every facet of a project from the site survey to final, on-site commissioning, training and local support.

CoJetix combined JetMix and Fast Loop Sampling System

Sampling Systems

CoJetix™ – Liquid hydrocarbon sampling for custody transfer or allocation measurement.

Bypass Loop – A high accuracy, simple to maintain, sampling system mounted in a pumped bypass/fast loop.

Probe – An in-line liquid hydrocarbon sampling system suitable for 4" to 52" pipelines.

A probe sampler inserted into the pipeline with a mixing system, installed upstream, if required.

JetMix™ – A powered mixing system designed for crude oil and liquid hydrocarbon sampling.

Sampling and Analysis

A CoJetix or bypass loop sampling system with on-line analyzers such as water-in-oil monitors and densitometers integrated in the sampling loop.

Wet Gas – Designed to correct the errors in DP measurement caused by the presence of liquid in the gas.

IsoFraction™ LNG – A gas sampling system with an integrated stabilization, vaporization and control system.

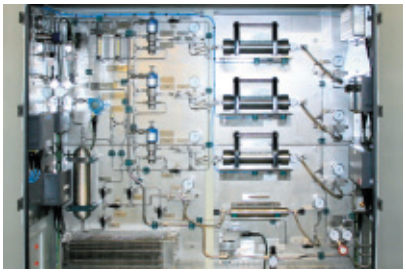

IsoFraction LNG Sampling System

Blending Systems

Ratio Control – Suitable for a wide range of applications and blend products to an extremely accurate component ratio.

Density Trim – These blenders are used for applications such as crude oil and propane/ butane blending.

The blender uses a densitometer to optimize the quality of the final product.

Viscosity Trim – These blenders are suitable for blending products such as bunker fuel oil and crude oil.

The blender uses a viscometer to optimize the quality of the final product.

Products

- Probe Samplers
- Cell samplers
- Pipeline mixers
- Flow meters
- Loop Extractors
- Sample receivers
- Control systems (Sampling & Blending)
- Laboratory equipment
- Header mixing systems (Blending)

Services

- Site survey
- Consultancy
- Design, fabrication and testing
- Site start-up
- System proving
- Performance guarantee
- On-site support

For more detailed information visit: www.jiskoot.com

BARTON® & NUFLO™

Industrial Products

Like many companies working their way through the last two decades, the former ITT Barton faced times of great change: a "spin-off" from a large corporate parent, a division of assets, and a final acquisition by a much larger entity. Unlike other companies, however, the road traveled has only served to strengthen and expand the depth and breadth of the Barton product portfolio.

While the chart at right outlines the journey, the key development is the ultimate destination: Cameron. Cameron recognized the value of reuniting the oil and gas assets of Barton with the industrial process control assets of PRIME Measurement Products. The result is a team of professionals with a history of excellence and the potential for significant growth.

To support its investment, Cameron has created an Industrial Products portfolio targeted at major process markets such as bulk distribution, military fueling operations and power generation plants. Included in the portfolio are the traditional Barton products along with highly successfully NuFlo product lines such as turbine meters, totalizers and the Differential Pressure Cone Meter.

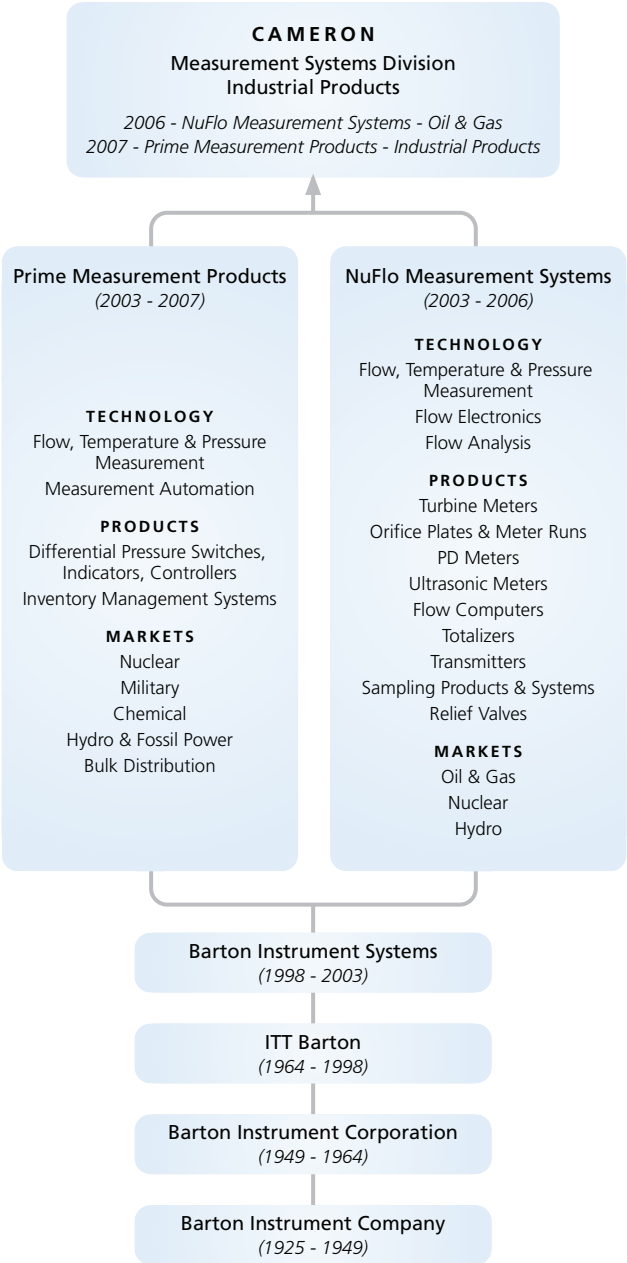

Industrial Products Portfolio

DPU Products

- Barton Chart Recorders, Controllers and Transmitters
- Barton Indicators and Switches
- Barton Sealed Sensor Systems

Remote Telemetry Systems for Inventory Management

- Barton DataScan / CryoScan RTU Systems

Turbines and Totalizers

- NuFlo MC Family of Totalizers and Flow Analzers
- NuFlo Turbine Meters
- Barton Turbine Meters

Electronic Transmitters

- Barton A/C Series FCX Transmitters

For more information on the Industrial Product portfolio visit: www.c-a-m.com/industrial or request Doc: NF00118

LINCO™

Linco Metering Solutions

Through the acquisition of NATCO, Cameron has integrated two well-respected product and service brands – Linco Electromatic and PAAI Process Analytical Applications, Inc. – to its Measurement Systems division.

Linco brings to Cameron an expanded capability to measure the quantity and quality of liquids in upstream and downstream applications. Linco provides expertise in the following areas:

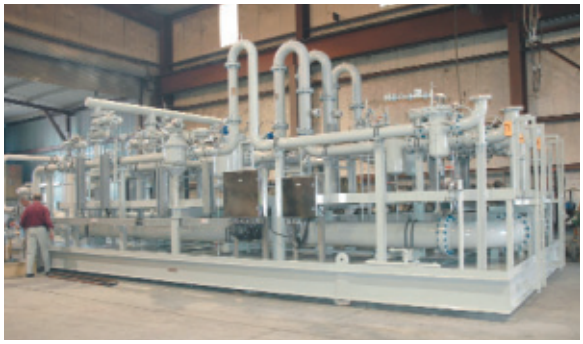

Liquid Custody Transfer Measurement Solutions

Established in Midland, Texas, in 1967, Linco brings to Cameron a reputation for outstanding service and a legacy of being a trusted representative for best-in-class manufacturers. By becoming part of Cameron's Measurement Systems division, Linco nearly triples the size of its highly qualified US sales network while benefiting from a business system designed to support its core market strengths.

Systems

Linco offers a one-stop shop for the engineering, automation and fabrication of measurement systems. Hundreds of Linco-designed automation systems are in operation in tank farms, transport terminals and pipeline terminals around the world. Linco is also considered a leader in the design, commissioning and service of a broad range of systems and skids that provide metering, proving, loading and unloading. Lease Automatic Custody Transfer (LACT), odorant induction and control.

Training and Service

Few, if any, measurement organizations in the US offer the same range of field service options as Linco. Supported by a network of field offices and technicians, its service portfolio includes installation and commissioning, portable meter proving for field installation, large volume flow loop proving for meter certification, meter rebuilds, calibration and repairs. Linco's custody transfer meter school is considered one of the top liquid meter training courses in the country.

PROCESS ANALYTICS™

Process Analytics

PROCESS ANALYTICS

The Process Analytics business unit (formerly PAAI Process Analytical Applications, Inc.) represents a team of specialists with the capability to provide a broad range of instrumentation, systems integration and contract technical support services. Initially recognized for its expertise in gas chromatography and packed columns, the team recently expanded its service to include turn-around support services, environmental testing, analytical data purchase and specialized analytical products.

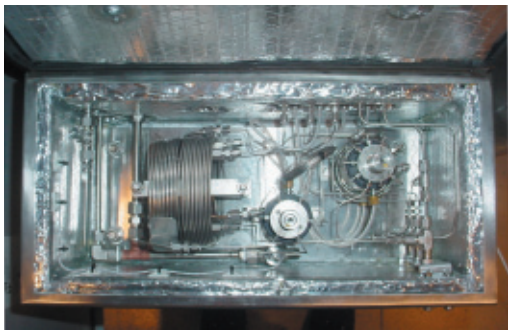

Engineering & Application Development

With over 100 years of combined experience, Process Analytics has provided highly technical yet cost-effective solutions to a broad range of analytical challenges. From the design and modification of process gas chromatographs to assisting with the development and packaging of process analyzers, this group understands the unique challenges of the job and tailors its service to your project's specific technical requirements.

Contract Technical Services

To assist companies challenged with maintaining technical excellence while adhering to strict budgets, Process Analytics developed and now provides a contract recruitment model that finds and places experienced engineers, designers and technicians specializing in analyzer, instrumentation and electrical applications. Contract services can also cover ongoing agreements to maintain and support analyzers, HRVOC monitoring systems, gas detection systems and other Continuous Emissions Monitoring Systems (CEMS).

Systems Design & Integration

Few systems integration organizations can compare to Process Analytics when it comes to the depth and breadth of intelligence related to designing and integrating analytical systems. Based on years of experience, the systems integration group at Process Analytics has developed processes and procedures to produce analyzers, sample systems, control systems, analyzer shelters and Continuous Emissions Monitoring Systems (CEMS). Additionally, the systems integration group maintains strong relationships with well-respected equipment manufacturers to ensure end-users benefit from the highest quality equipment as well as a technical team they can trust.

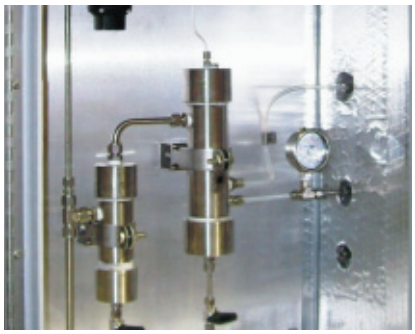

Products, Repairs & Training

- Gas Chromatograph Application Development
- Packed and Capilary Columns
- Process Analyzer Training Programs
- Analytical Equipment Leasing
- Environmental Testing Services (Relative Accuracy Test Audits and Cylinder Gas Audits)
- Process and Environmental Data Purcahse Contracts
- Valve and Board Repair – Exchange Program for the Siemens Advance® Gas Chromatograph

Worldwide Locations

MEASUREMENT SYSTEMS

REGIONAL HEADQUARTERS

Divisional Headquarters
14450 JFK Boulevard
Houston, TX 77032
Tel: 281.582.9500
Fax: 281.582.9599
E-mail: ms-us@c-a-m.com

UK Headquarters
3 Steyning Way
Southern Cross Trading Estate
Bognor Regis
West Sussex, England PO22 9TT
Tel: +44.1243.826741
Fax: +44.1243.860263
E-mail: ms-uk@c-a-m.com

Toll-Free in North America:
1.800.654.3760

Canadian Headquarters
7944 10 Street NE
Calgary, AB T2E 8W1
Tel: 403.291.4814
Fax: 403.291.5678
E-mail: ms-canada@c-a-m.com

Asia Pacific Headquarters
No. 8 Jalan Pendaftar U1/54
Temasya Industrial Park
Shah Alam 40150
Selangor Darul Ehsan, Malaysia
Tel: +603.5569.0501
Fax: +603.5569.0502
E-mail: ms-kl@c-a-m.com

BUSINESS UNITS

Industrial Products
4040 Capital Avenue
City of Industry, CA 90601
Tel: 562.222.8440
Fax: 562.222.8446
E-mail: ms-industry@c-a-m.com

Jiskoot Quality Systems
Goods Station Road
Tunbridge Wells
Kent, TN1 2DJ
Tel: +44 1892 518000
Fax: +44 1892 518100
E-mail: information@jiskoot.com

Caldon Ultrasonics
1000 McClaren Woods Drive
Coraopolis, PA 15108
Tel: 724.273.9300
Fax: 724.273.9301
E-mail: ms-caldon@c-a-m.com

Linco Metering Solutions
4580 W Wall Street
Midland, Texas 79703
Tel: 432.694.9644
Fax: 432.694.0921
www.lemc.com

Process Analytics
5318 FM 517 Rd. West
Alvin, TX 77511
Tel: 281.482.4334
Fax: 281.614.0303
www.processanalytical.com